748.01.2340	Repair Kit

Application:

OEM	OE

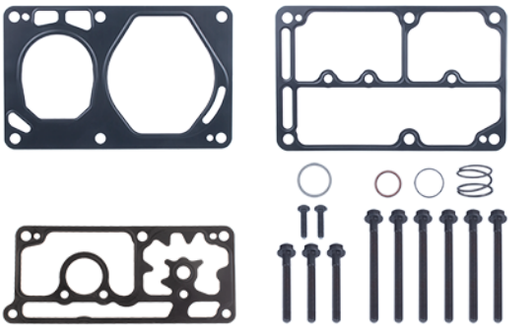

Components

OEM	OE

OEM	OE

OEM	OE

OEM	OE

OEM	OE

OEM	OE

OEM	OE

OEM	OE

OEM	OE

OEM	OE

OEM	OE

OEM	OE

All original equipment manufacturers names, numbers, symbols and descriptions used in this catalogue are for reference purposes only.